CORE VALUES | QUALITY PRODUCTS | SUPERIOR SERVICE

CORE® LIFTING PRODUCTS

TILT-UP WALL BLOCKS

Crosby® McKISSICK®

ROPEBLOCK

CoreLifting.com

Crosby®

GUNNEBO® Industries

PRODUCT CATALOG

with application & warning information

Imperial

TU-481

- Wide range of sizes available:
  - 30 and 60 short Tons (27 and 54 metric tons) capacity
  - 1" to 2-1/4" (25mm to 60mm) wire rope diameter
  - 16" to 24" (406mm to 610mm) sheave diameter
  - Larger capacity blocks available
- Meets or exceeds all requirements of ASME B30.26. Importantly, these blocks meet other critical performance requirements including fatigue life, impact properties and material traceability, not addressed by ASME B30.26.
- Marked in short tons unless metric tag requested at time of order.

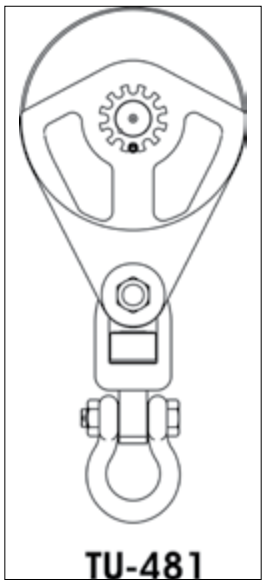

APPLICATION AND WARNING INFORMATION
SECTION 17

TU-481 High Capacity Snatch Blocks for Tilt-Up Wall Construction With Swivel Shackle

Working Load Limit (T)	Sheave Diameter (in)	Wire Rope Diameter (in)	With Swivel Shackle	
			TU-481 Stock No.	TU-481 Weight Each (lb)
30	16	1 - 1-1/4	2108327	235
30	16	1-1/4 - 1-1/2	2108351	235
30	20	1 - 1-1/4	2108387	250
30	20	1-1/4 - 1-1/2	2108411	250
60	18	1 - 1-1/4	2108453	390
60	18	1-1/4 - 1-1/2	2108483	390
60	24	1 - 1-1/4	2108528	450
60	24	1-1/4 - 1-1/2	2108558	450
60	24	1-1/2 - 1-3/4	2108588	450
60	24	1-3/4 - 2	2108618	450
60	24	2 - 2-1/4	2108633	450

4:1 Design Factor.
Contact our Block Hotline 800-772-1555 or visit kitocrosby.com/engineeredsolutions for more information.

© 2025 Kito Crosby. All Rights Reserved.

ROPEBLOCK
CATALOG

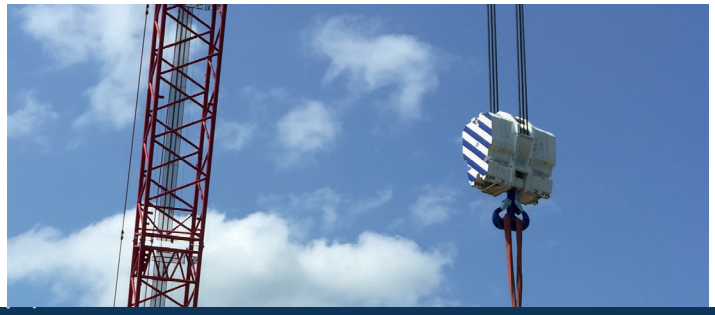

ROPEBLOCK

HIGH CAPACITY LIGHT WEIGHT BLOCKS

LIGHT WEIGHT TILT-UP BLOCKS

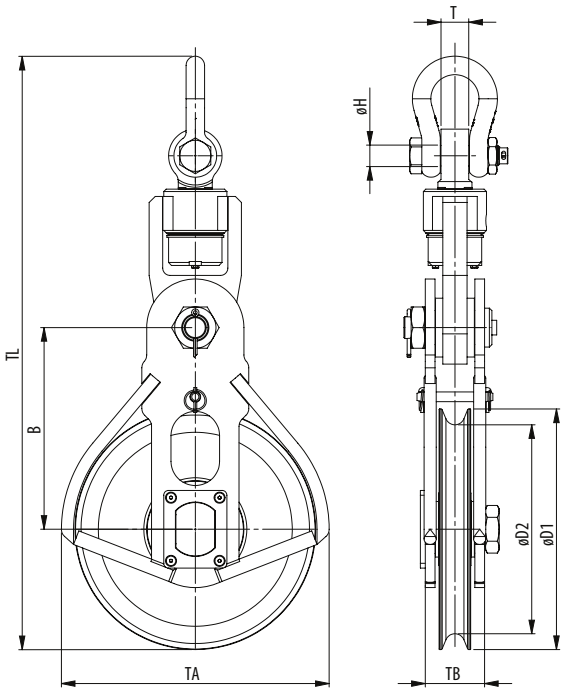

- Hook
- Clevis
- Tailboard
- Oblong eye

Model No.	WLL (UStons)	For wire ød (inch)	Dimensions (inch)								Weight (lbs)
			øD1	øD2	B	øH	T	TA	TB	TL	
HCLW 240.28.1.25.S	27.5	1 - 1⅛	11.8	9.4	10.2	1.6	2.1	14	4	28.7	155
HCLW 355.32.1.27.S	30	1⅛ - 1¼	16.5	14	14.8	1.7	2.2	18.7	4.4	39.1	265
HCLW 355.36.1.32.S	35	1¼ - 1⅜	16.5	14	14.8	1.7	2.2	18.7	4.8	39.1	265
HCLW 430.32.1.27.S	30	1⅛ - 1¼	19.5	16.9	16.3	1.7	2.2	21.7	4.4	42.2	240
HCLW 430.32.1.32.S	35	1⅛ - 1¼	19.5	16.9	16.3	1.7	2.2	21.7	4.8	42.1	285
HCLW 430.38.1.32.S	35	1¼ - 1½	19.5	16.9	16.3	1.7	2.2	21.7	4.8	42.1	255
HCLW 430.38.1.40.S	45	1¼ - 1½	19.5	16.9	16.3	2	2.8	21.7	4.8	43.6	320
HCLW 520.38.1.55.S	60	1¼ - 1½	23.4	20.5	19.1	2.8	3.9	25.6	5.2	51.9	420
HCLW 520.44.1.55.S	60	1½ - 1¾	23.4	20.5	19.1	2.3	3.1	25.6	5.2	51.5	420
HCLW 520.52.1.55.S	60	1¾ - 2	23.4	20.5	19.1	2.3	3.1	25.6	5.2	51.5	420
HCLW 630.58.1.81.S	90	2 - 2¼	28	24.8	22.6	2.9	3.9	30.6	6	62.4	880
HCLW 630.64.1.81.S	90	2¼ - 2½	28	24.8	22.6	2.9	3.9	30.6	6	62.4	880
HCLW 760.70.1.110.S	120	2½ - 2¾	35.4	29.9	28.9	3.4	4.7	38.6	7.9	74.9	1200
HCLW 760.76.1.110.S	120	2¾ - 3	35.4	29.9	28.9	3.4	4.7	38.6	7.9	74.9	1200
HCLW 760.76.1.125.S	137.5	2¾ - 3	35.4	29.9	28.9	3.3	4.7	38.6	7.9	74.4	1320
HCLW 760.76.1.137,5.S	150	2¾ - 3	35.4	29.9	28.9	3.3	4.7	38.6	7.9	74.4	1540

Minimum Ultimate Strength = 4 x WLL

WLL= Working Load Limit on head fitting.

- The dimensions in this table are indicative only. A drawing will always be submitted prior to production and will be the leading document when discussing dimensions.
- Blocks shown here are standard models; inquiries for custom versions are welcome.
- Refer to wire rope manufacturers D/d ratio guideline.
- Standard provided with roller bearing. Bronze bearing optional.

WARNING
SEE OUR WARNING & SAFETY INFORMATION ON PAGES 134 - 146

SEE OUR WARNING AND SAFETY INFORMATION ON PAGE 134

HIGH CAPACITY LIGHT WEIGHT BLOCKS

LIGHT WEIGHT TILT-UP BLOCKS

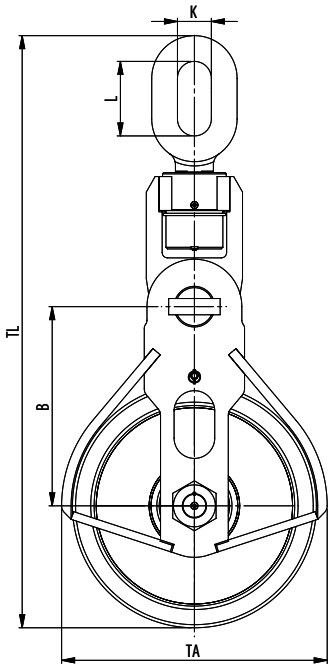

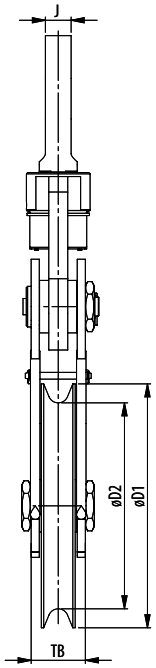

- Hook
- Clevis
- Tailboard
- Oblong eye

Model No.	WLL (UStons)	For wire ød (inch)	Dimensions (inch)									Weight (lbs)
			øD1	øD2	B	J	K	L	TA	TB	TL	
HCLW 240.28.1.25.O	27.5	1 - 1⅛	11.8	9.4	10.2	2	3	5.9	14	4	37.2	175
HCLW 355.32.1.27.O	30	1⅛ - 1¼	16.5	14	14.8	2.4	3.1	6.9	18.7	4.4	47	290
HCLW 355.36.1.32.O	35	1¼ - 1⅜	16.5	14	14.8	2.4	3.1	6.9	18.7	4.8	47	290
HCLW 430.32.1.27.O	30	1⅛ - 1¼	19.5	16.9	16.3	2.4	3.1	6.9	21.7	4.4	50	275
HCLW 430.32.1.32.O	35	1⅛ - 1¼	19.5	16.9	16.3	2.4	3.1	6.9	21.7	4.4	49	310
HCLW 430.38.1.32.O	35	1¼ - 1½	19.5	16.9	16.3	2.4	3.1	6.9	21.7	4.8	50	290
HCLW 430.38.1.40.O	45	1¼ - 1½	19.5	16.9	16.3	2.6	3.5	7.9	21.7	4.8	51.6	340
HCLW 520.38.1.55.O	60	1¼ - 1½	23.4	16.9	19.1	2.6	3.5	7.5	25.6	5.2	60	480
HCLW 520.44.1.55.O	60	1½ - 1¾	23.4	20.5	19.1	2.8	3.9	8.7	25.6	5.2	60.5	480
HCLW 520.52.1.55.O	60	1¾ - 2	23.4	20.5	19.1	2.8	3.9	8.7	25.6	5.2	60.5	480
HCLW 630.58.1.81.O	90	2 - 2¼	28	24.8	22.6	3.1	4.3	9.8	30.6	6	74.1	915
HCLW 630.64.1.81.O	90	2¼ - 2½	28	24.8	22.6	3.1	4.3	9.8	30.6	6	74.1	915
HCLW 760.70.1.110.O	120	2½ - 2¾	35.4	29.9	28.9	3.7	4.9	10.8	38.6	7.9	86.2	1300
HCLW 760.76.1.110.O	120	2¾ - 3	35.4	29.9	28.9	3.7	4.9	10.8	38.6	7.9	86.2	1300
HCLW 760.76.1.125.O	137.5	2¾ - 3	35.4	29.9	28.9	3.9	4.9	10.8	38.6	7.9	86.2	1430
HCLW 760.76.1.137,5.O	150	2¾ - 3	35.4	29.9	28.9	3.9	4.9	10.8	38.6	7.9	86.2	1650

Minimum Ultimate Strength = 4 x WLL

WLL= Working Load Limit on head fitting.

- The dimensions in this table are indicative only. A drawing will always be submitted prior to production and will be the leading document when discussing dimensions.
- Blocks shown here are standard models; inquiries for custom versions are welcome.
- Refer to wire rope manufacturers D/d ratio guideline.
- Standard provided with roller bearing. Bronze bearing optional.

WARNING
SEE OUR WARNING & SAFETY INFORMATION ON PAGES 134 - 146

SEE OUR WARNING AND SAFETY INFORMATION ON PAGE 134